2024-01

FBT66

SoBuy

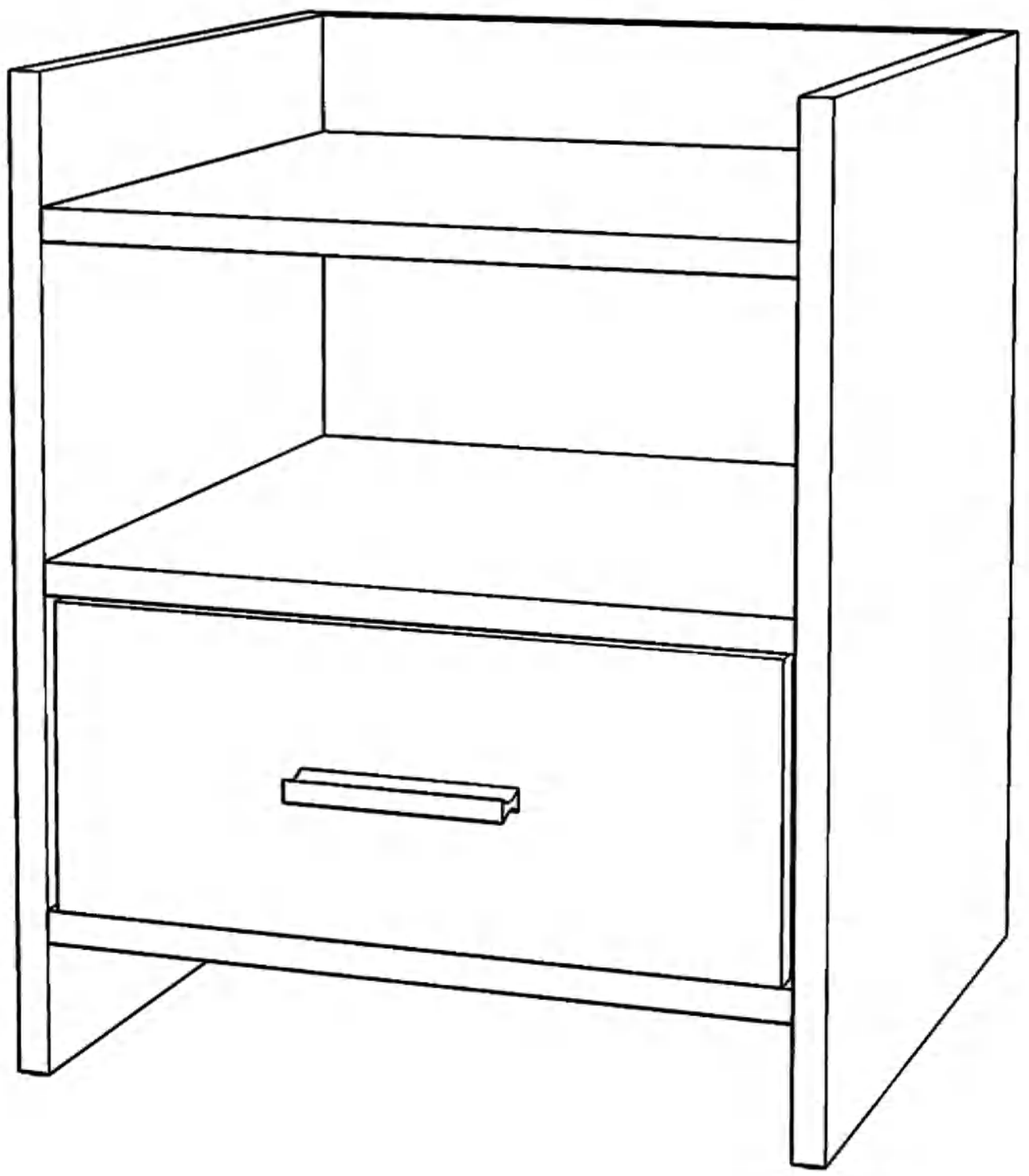

TOOLS:

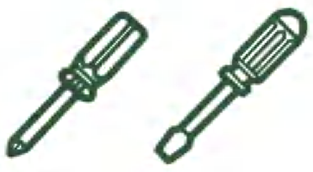



Pour en savoir plus:
www.quefairedemesdechets.fr

1

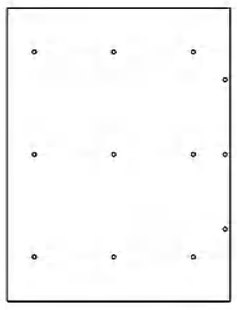

2

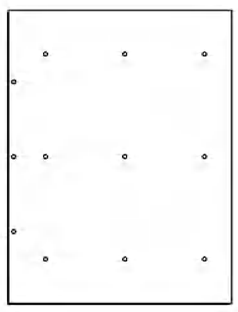

3

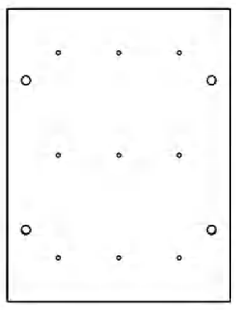

4
×
3

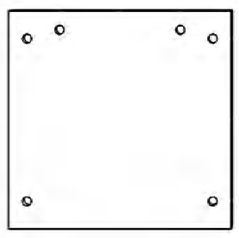

5



6

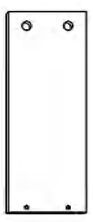

7

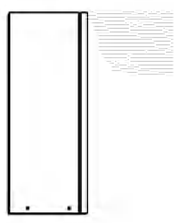

8



9

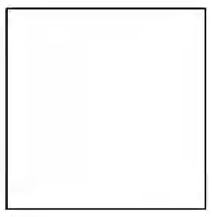

UNIT:MM

H
×
26



M6*35

J
×
26



Φ15*10

K
×
11



Φ6*30

L
×
4



M4*35

M
×
2



M4*18

F

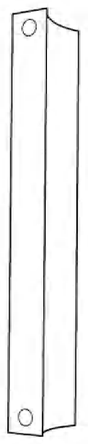

N
×
4



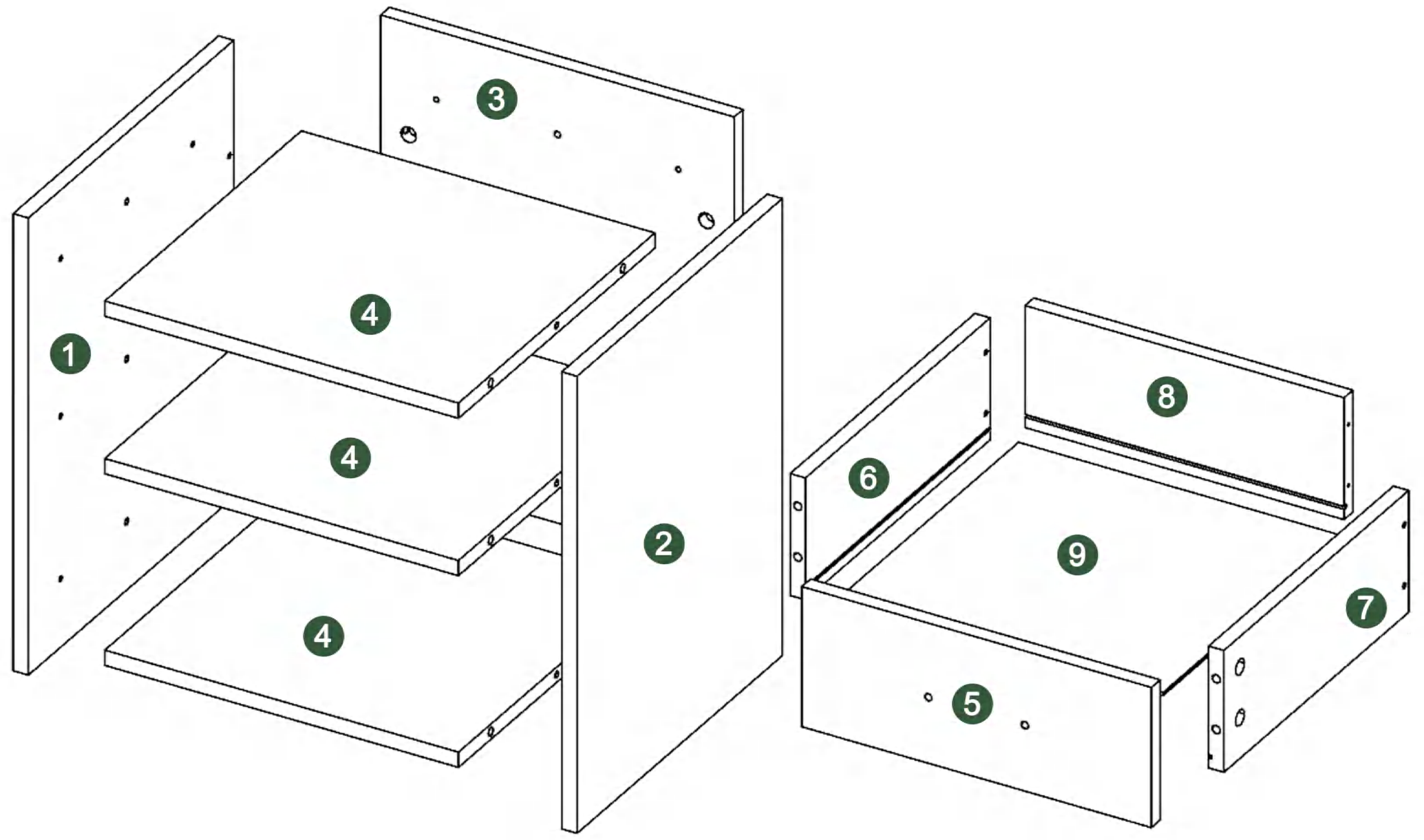

BOLT INSTALLATION AS BELOW:

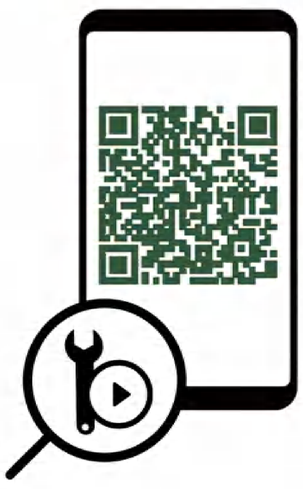

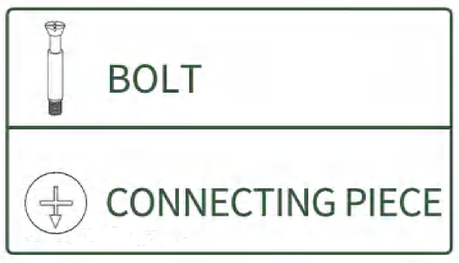

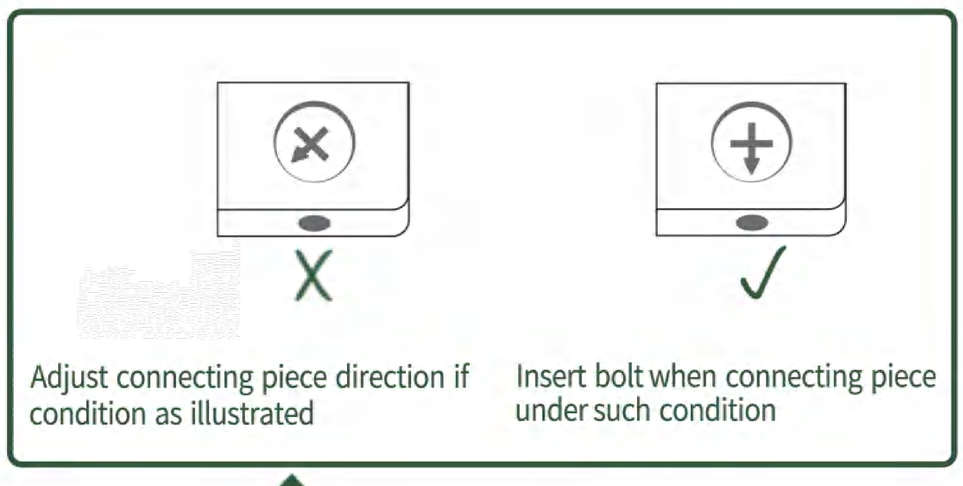

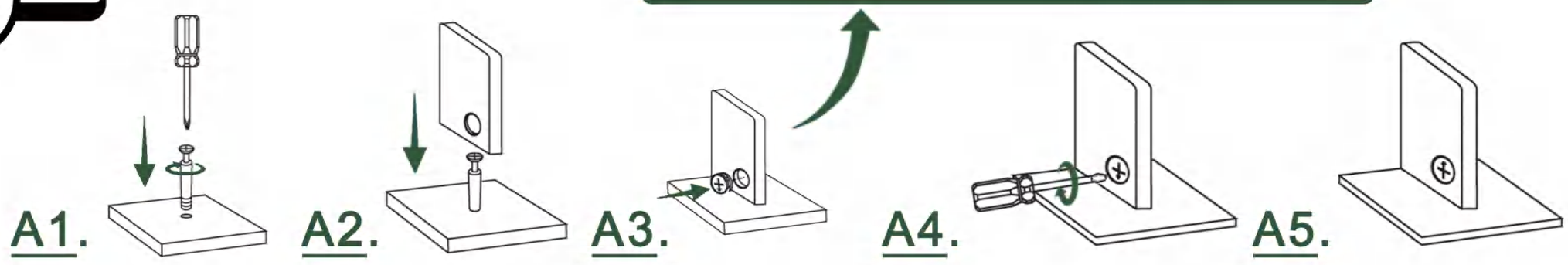

1.

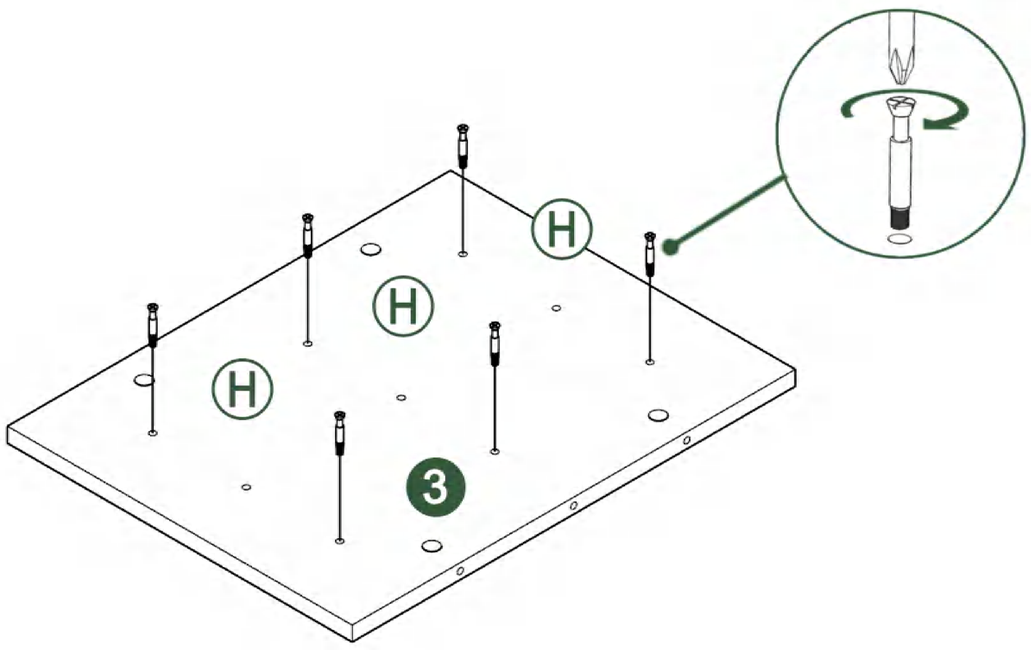

2.

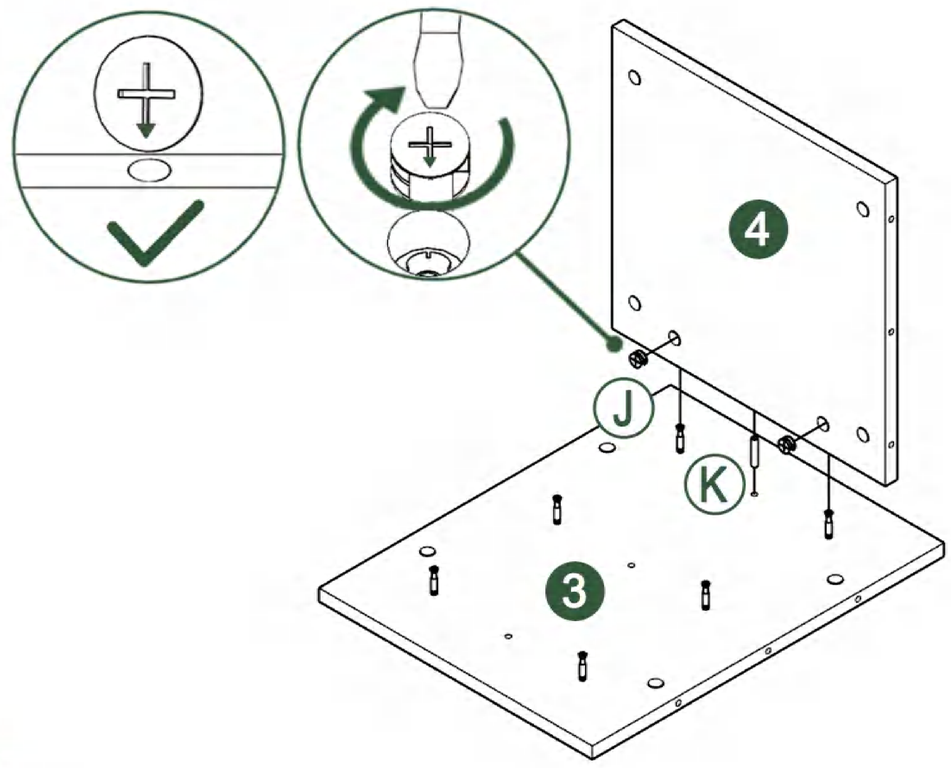

3.

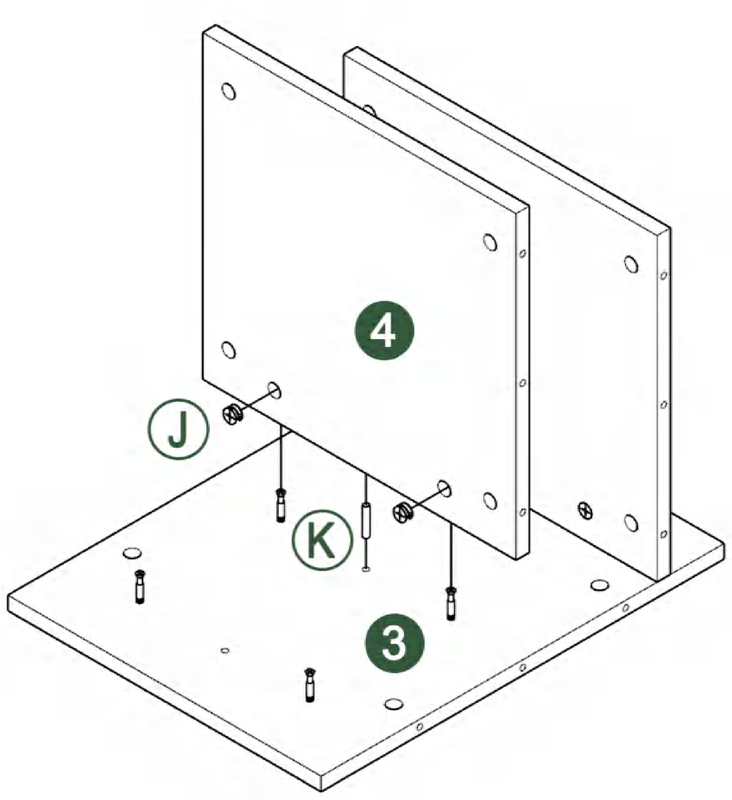

4.

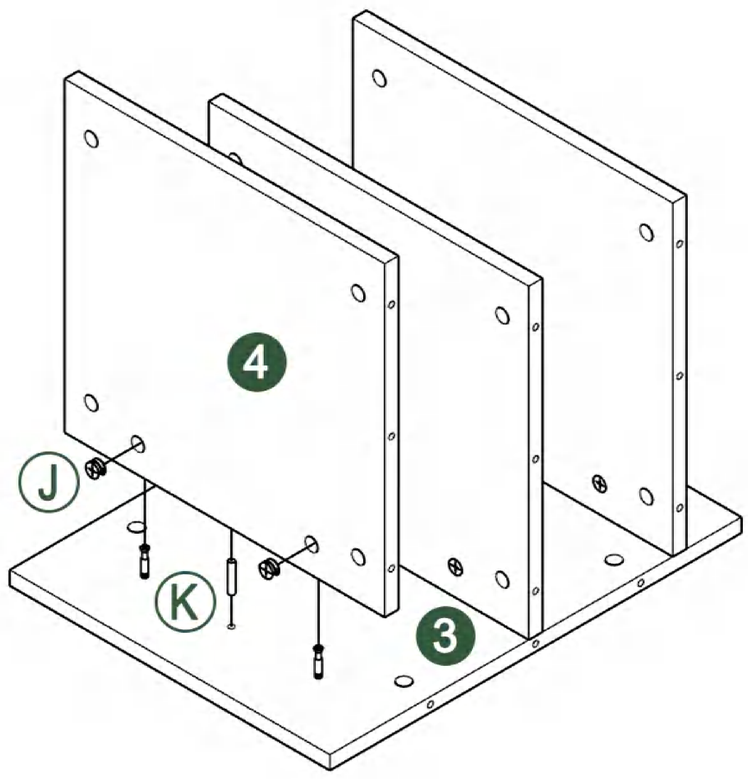

5.

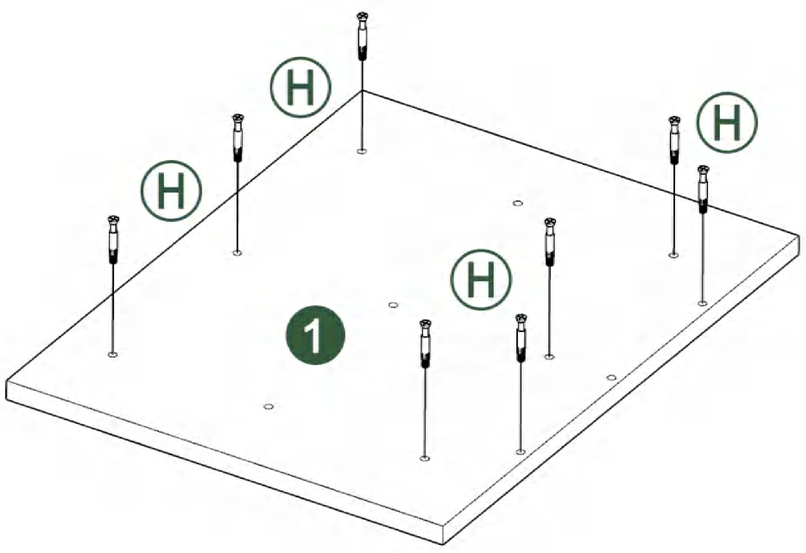

6.

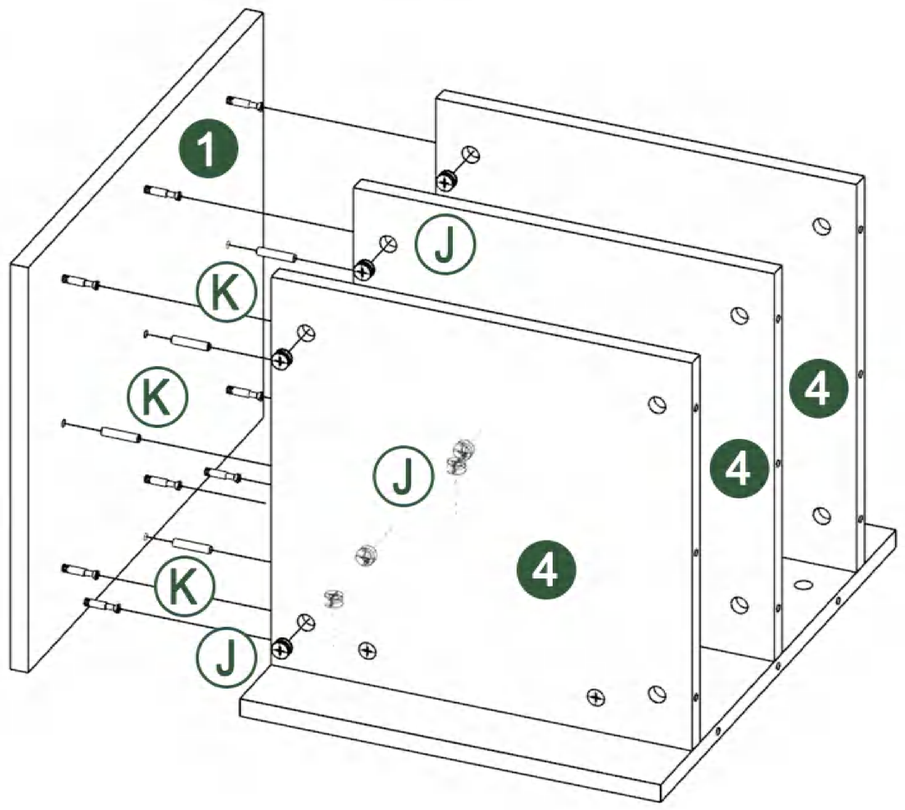

7.

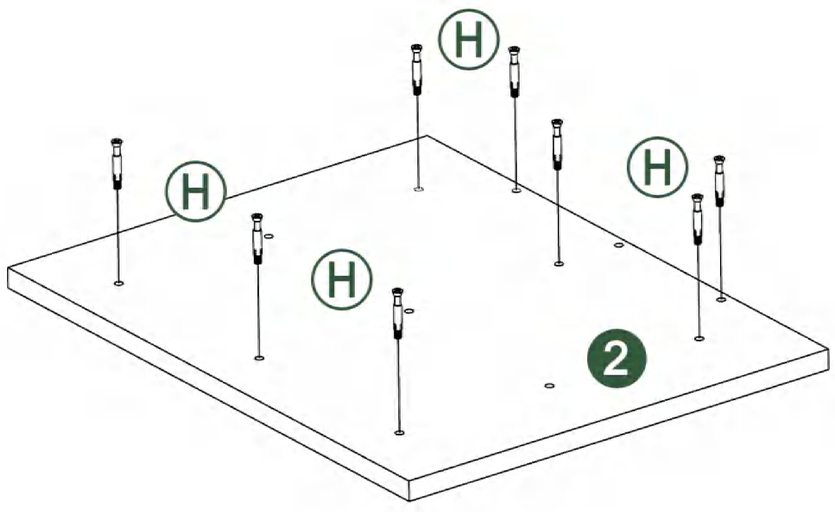

8.

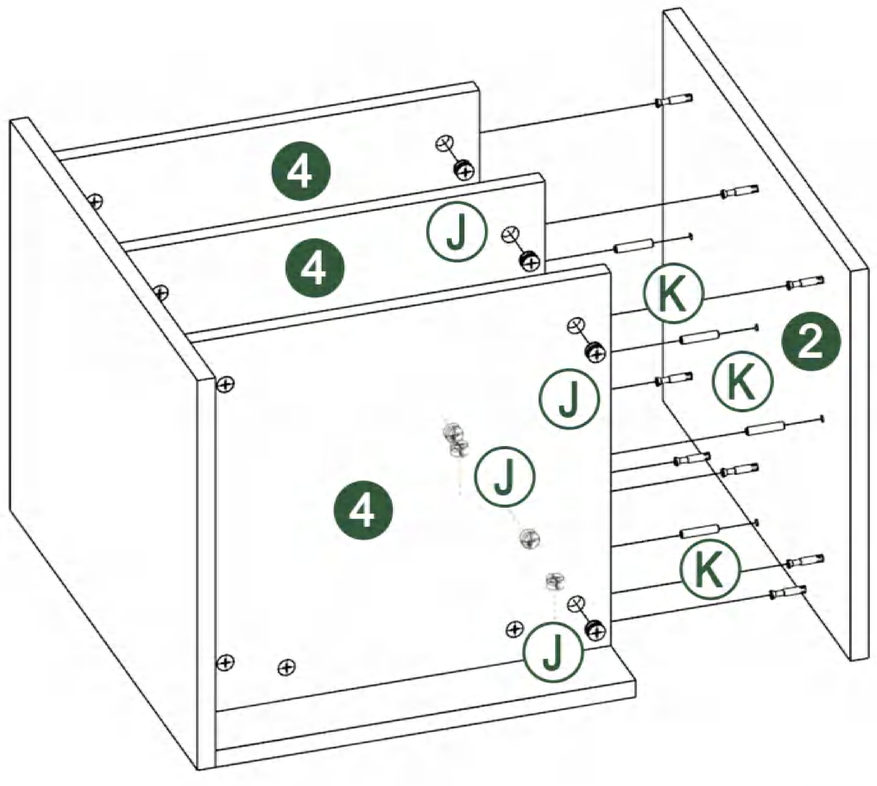

9.

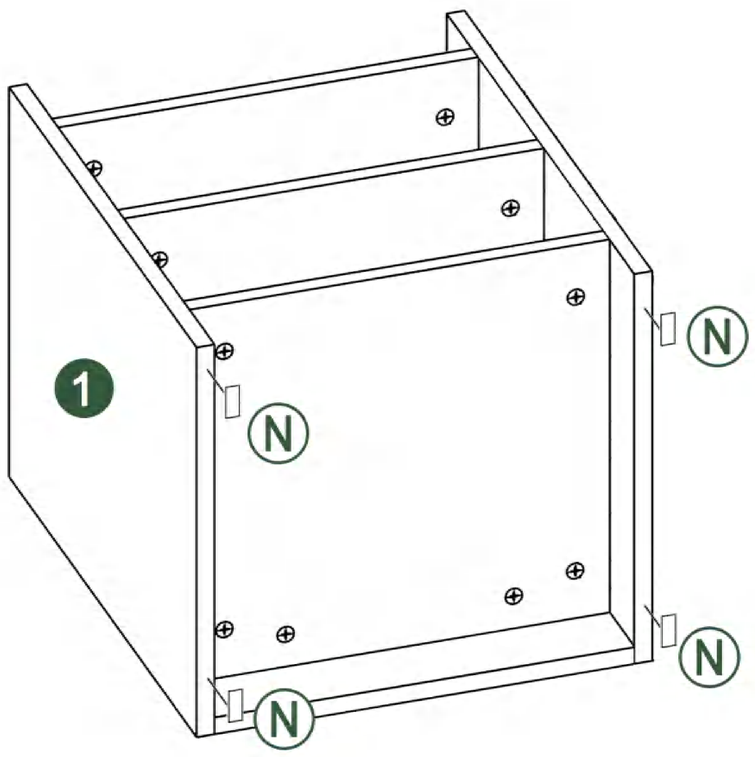

10.

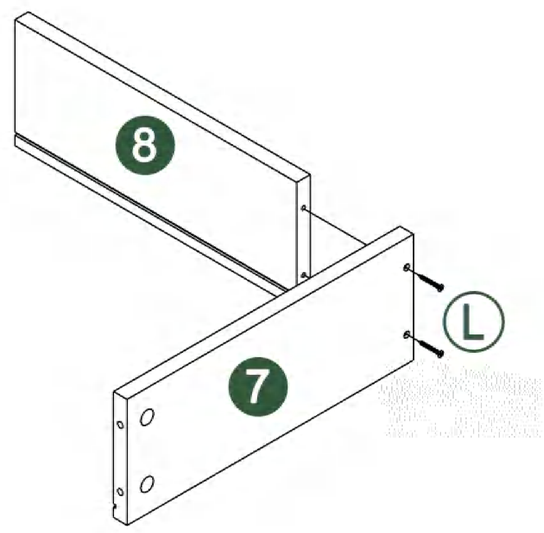

11.

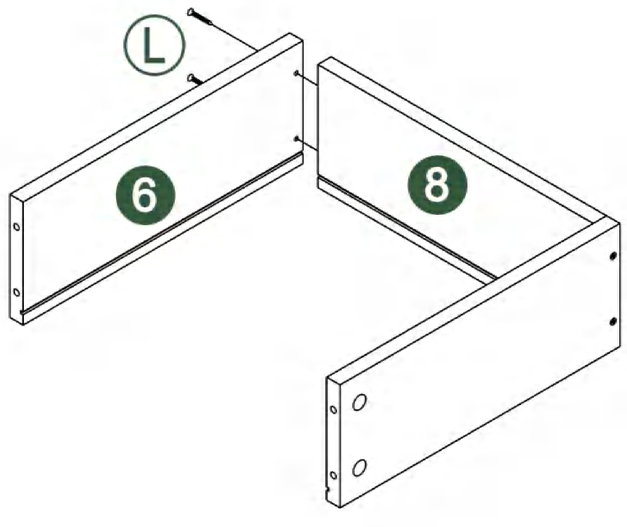

12.

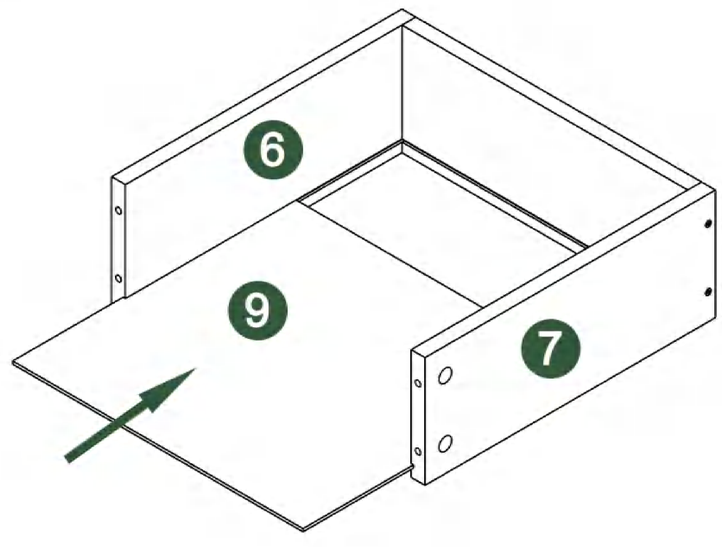

13.

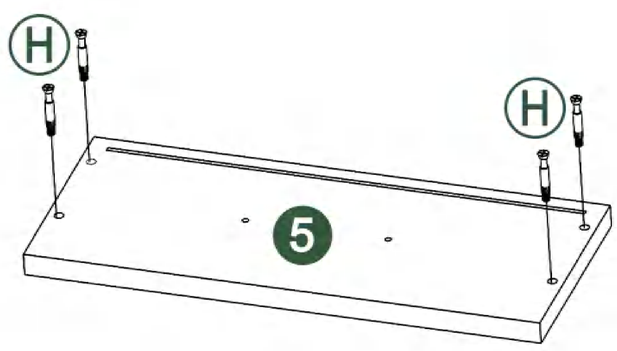

14.

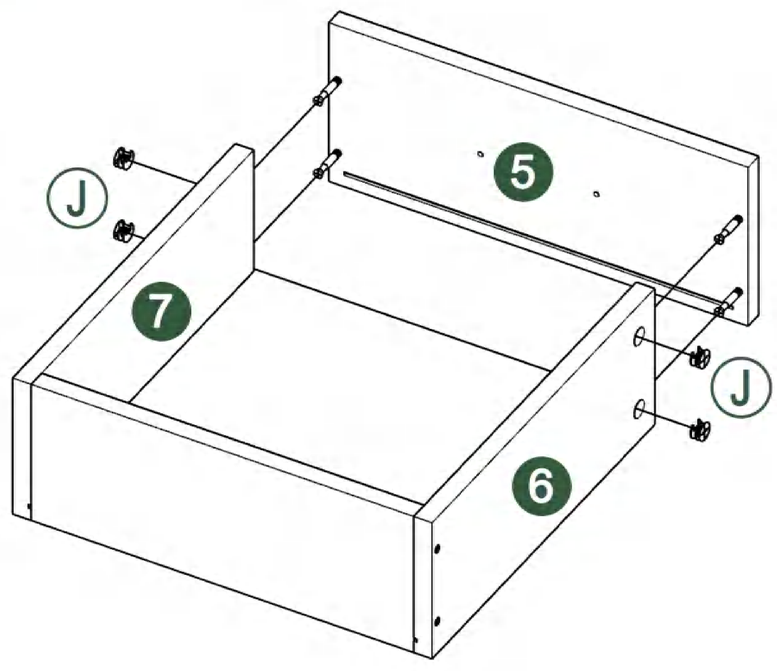

15.

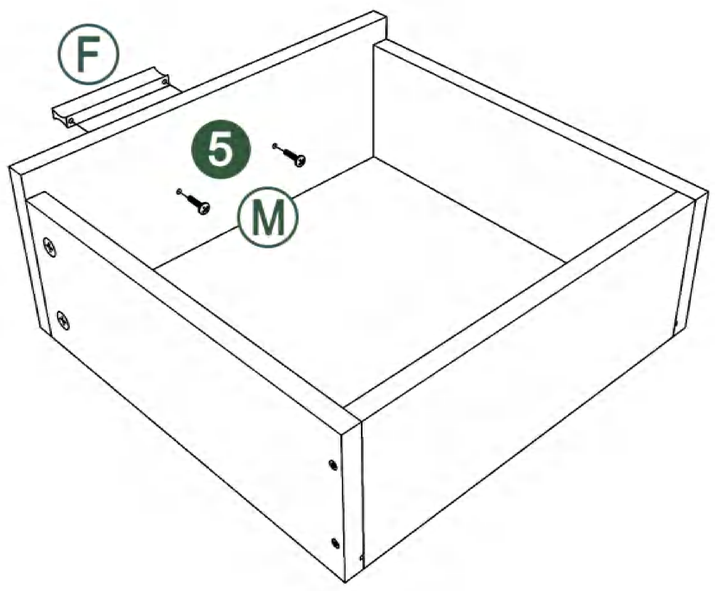

16.

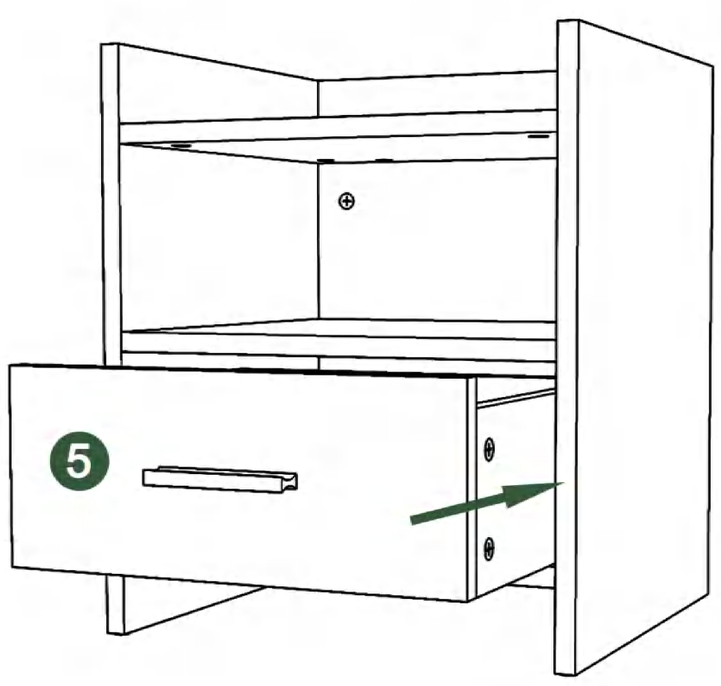

ENJOYING THE INSTALLATION?

Scan the QR code to share your review

Stand:08.2024